CAD FILE:

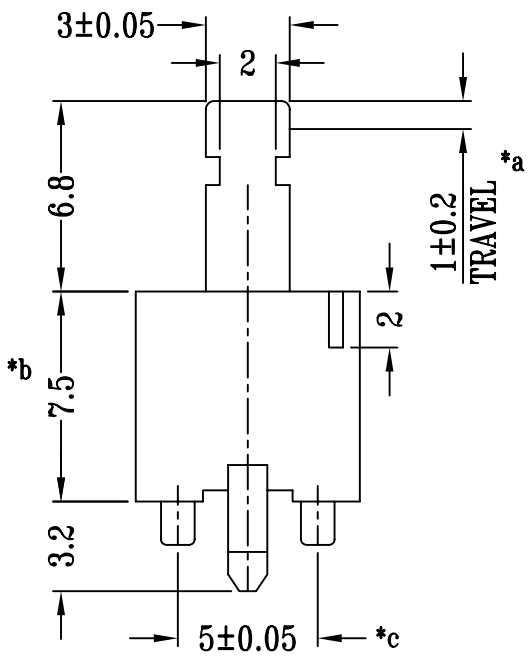


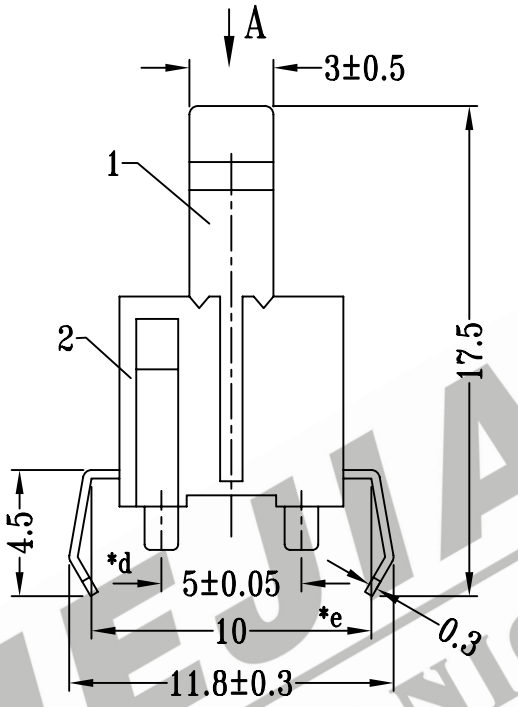


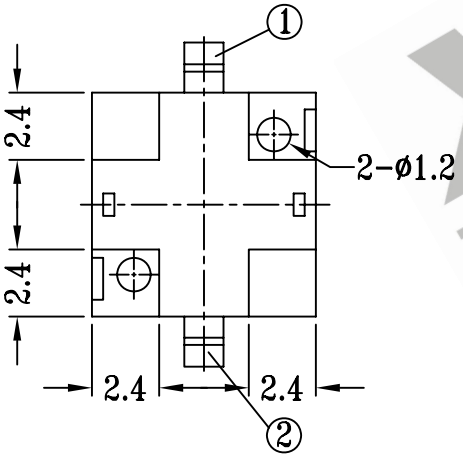


A VIEW

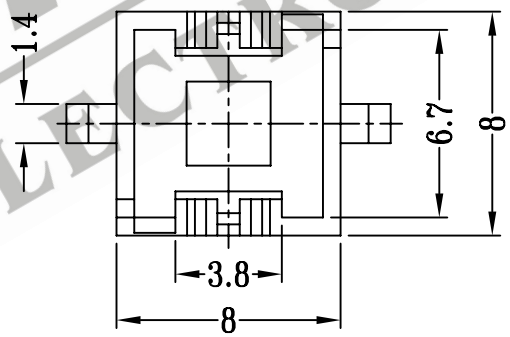


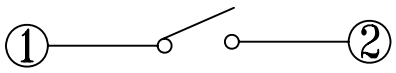


CIRCUIT DIAGRAM

| OPERATING FORCE | CODE |
|---|---|
| 130±30gf | V |

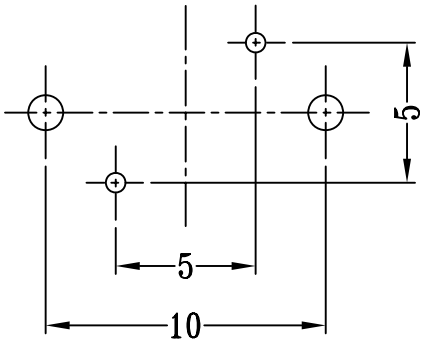


P.C.B LAYOUT

注:带"*"表示关键尺寸(5个)

| NO. | PARTS | MATERIALS | Q'TY | FINISH |
|---|---|---|---|---|
| 7 | | | | |
| 6 | | | | |
| 5 | | | | |
| 4 | | | | |
| 3 | CONTACT | RUBBER/CONDUCT | 1 | GREY/BLACK |
| 2 | CASE | NYLON/BRASS STRIP | 1 | WHITE(BLACK)/Ag PLATED |
| 1 | KNOB | POM | 1 | WHITE/BLACK |

TOLERANCE UNLESS SPECIFIED
WITHIN: 1.5±0.1mm
OVER: 1.5±0.2mm

SHENZHEN XIEJIA ELECTRONICS CO.,LTD.

| ISSUE | DATE | DESCRIPTIONS OF REVISION | APPD. |
|---|---|---|---|
| | | | |

TITLE : TACT SWITCH
UNIT : mm
DRWG NO.: XJ-DR-TC0020-00
MODEL: TC-0020
SCALE: 7:2

| | | |
|---|---|---|
| DWN. | ZHOUYU | 2003-7-3 |
| CHK'D | FANGYING | 2003-7-3 |
| APPD. | KANGXINAN | 2003-7-3 |

ALL MATERIALS MUST BE COMPLIANT TO ROHS

XIEJIA ELECTRONICS